START
SOFT STARTERS

Innovation in soft start technology

VMX-agility™

QUICK START GUIDE

MAN-AGY-026. Version 01

www.startsoftstarters.co.uk

VMX-agility Quick Start Guide

© Start Soft Starters
Units 96 C & D, Blackpole Trading Estate
Blackpole Road, Worcester
WR3 8TJ
UK
www.startsoftstarters.co.uk
www.startsoftstarters.com

[Full User Manual (MAN-AGY-015) available from www.startsoftstarters.co.uk]

© 2022 by Start Soft Starters, all rights reserved
Copyright subsists in all VMX-Agility deliverables including magnetic, optical and/or any other soft copy of these deliverables. This document may not be reproduced, in full or in part, without written permission. Enquiries about copyright of VMX-Agility deliverables should be made to VMX-Agility. If, by permission of the copyright owner, any part of this document is quoted, then a statement specifying the original document shall be added to the quotation. Any such quotation shall be according to the original (text, figure or table) and may not be shortened or modified.

Safety

Important information

Installers should read and understand the instructions in this guide prior to installing, operating and maintaining the soft start. The following symbols may appear in this guide or on the soft start to warn of potential hazards or to draw attention to certain information.

Dangerous Voltage

Indicates the presence of a hazardous voltage which could result in personal injury or death.

Warning/Caution

Indicates a potential hazard. Any instructions that follow this symbol should be obeyed to avoid possible damage to the equipment, and personal injury or death.

Protective Earth (Ground)

Indicates a terminal which is intended for connection to an external conductor for protection against electric shock in case of a fault.

Caution Statements

The examples and diagrams in this manual are included solely for illustrative purposes. The information contained in this manual is subject to change at any time and without prior notice. In no event will responsibility or liability be accepted for direct, indirect or consequential damages resulting from the use or application of this equipment.

VMX-agility™ soft starts contain dangerous voltages when connected to the mains supply. Only qualified personnel that have been completely trained and authorised, should carry out installation, operation and maintenance of this equipment.
Installation of the soft start must be made in accordance with existing local and national electrical codes and regulations and have a minimum protection rating.
It is the responsibility of the installer to provide suitable grounding and branch circuit protection in accordance with local electrical safety codes.
This soft start contains no serviceable or re-usable parts.
The STOP function of the soft start does not isolate dangerous voltages from the output of the soft start. An approved electrical isolation device must be used to disconnect the soft start from the incoming supply before accessing electrical connections.

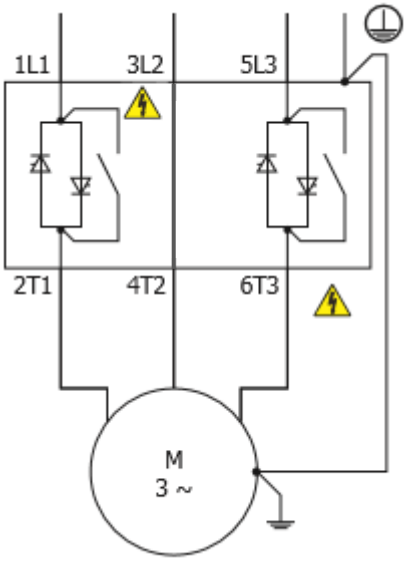

Installation

Mounting

Fix the unit to a flat, vertical surface using the mounting holes (or slots) on its base-plate. The mechanical outline diagrams, shown on Page 4, give the dimensions and mounting hole positions for each model. Ensure that:

- The orientation of the unit has the 'TOP' uppermost.
- The location allows adequate front access.
- You can view the touchscreen.
- Do not install other equipment that generates significant heat close to the soft starter.

Requirements for an Enclosure

For a typical industrial environment, an enclosure would provide the following:

- A single location for the unit and its protection/isolation switch-gear
- The safe termination of cabling and/or busbars
- Means to effect proper air flow through the enclosure

Enclosure Ventilation

When fitting VMX-agility™ into a cabinet, ventilation must be provided if the heat output of the unit is greater than the cabinet will dissipate. The heat dissipated can be approximated with the formula:

Starting

Watts (agility) = start current(A) x start time(s) x number of starts per hour/1800

Running

Watts (agility) = 0.4 x running amps

Use the following formula to determine the fan requirement. An allowance has been incorporated into the formula so that the figure for Q is the air delivery in the fan suppliers' data.

$$Q = (4 \times W_t / (T_{max} - T_{amb}))$$

Q = Volume of air (cubic metres per hour-m3/h)

Wt = Heat produced by the unit and all other heat sources within the enclosure (Watts) T_{max} = Maximum permissible temperature within the enclosure (40°C for a fully rated agility™)

T_{amb} = Temperature of the air entering the enclosure (°C) [to work in CFM, substitute °F for °C. Q is now in CFM]

Altitude Derate

Altitude above sea level 1000m (3281ft). Above 1000m de rate by 1% of agility i.e. per 100m (328ft) to a maximum altitude of 2000m (6562ft).

Ambient Temperature Derate

-20°C (-4°F) to 40°C (104°F). Above 40°C de-rate linearly by 2% of agility i.e. per °C to a maximum of 60°C (140°F).

Installation (continued)

Handling

The VMX-agility™ soft start range comprises 3 frame sizes, with various weights and dimensions. See pages 5-7 for further information.

Prior to installing the VMX-agility™ unit, the installer should carry-out a risk assessment. If considered appropriate, a suitable handling device should be used.

Do not lift the VMX-agility™ unit by attachment to the 3-phase terminal connections or busbars.

WARNING
HANDLING AND LIFTING HAZARD Ensure the area below any equipment is clear of all personnel and property. Failure to follow this practice may result in death, serious injury, or damage to equipment.

Accessories

The following accessories have been developed and tested for use with the agility range of soft starts:

VMX-AGY-012 Remote keypad for VMX-AGY-101 to VMX-AGY-305**.** Provides remote functionality for up to 32 soft starter units.

VMX-AGY-020 100Vac – 240Vac power supply. Provides mains voltage control power and digital control functionality. **For use with VMX-AGY-101 to VMX-AGY-113 only.**

VMX-AGY-021 100Vac – 240Vac power supply. Provides mains voltage control power and digital control functionality. **For use with VMX-AGY-101 to VMX-AGY-305.**

VMX-AGY-030 Cooling fan accessory for VMX-AGY-101 to VMX-AGY-113 only. Increases the number of starts per hour (see page 19).

VMX-AGY-031 Cooling fan accessory for VMX-AGY-201 to VMX-AGY-209 only. Increases the number of starts per hour (see page 19).

Installation (continued)

Dimensions VMX-AGY-101 to VMX-AGY-113

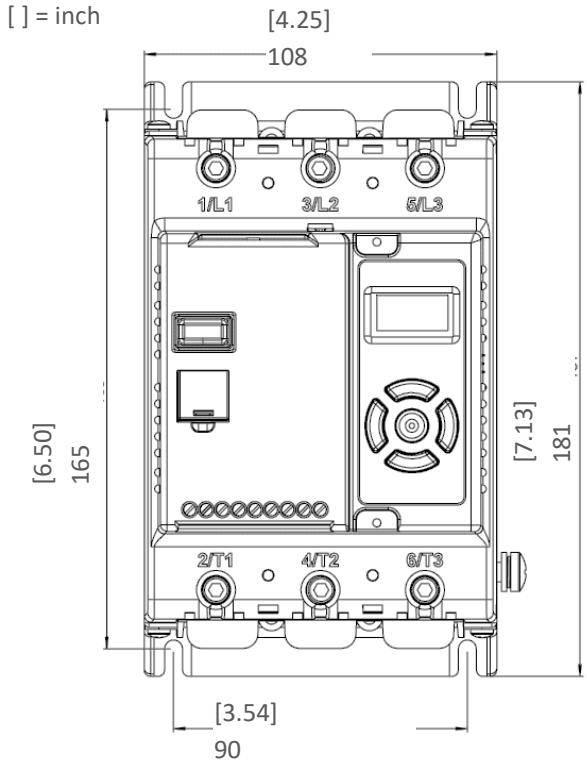

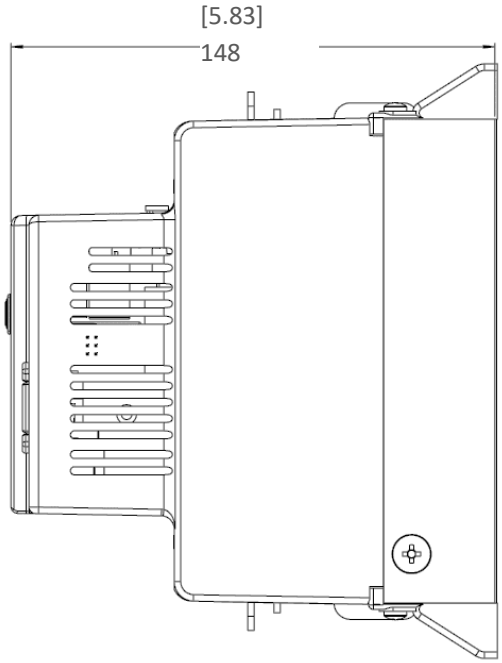

Weight 1.97kg (3.75lb)

Note: VMX-agility may be horizontally mounted with deration. See Horizontal Mounting Rating Tables

Fitting

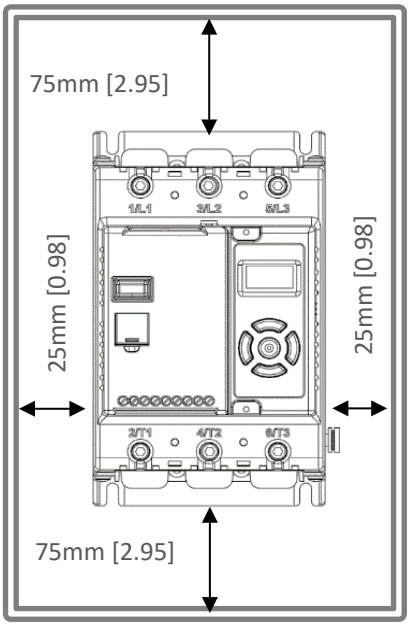

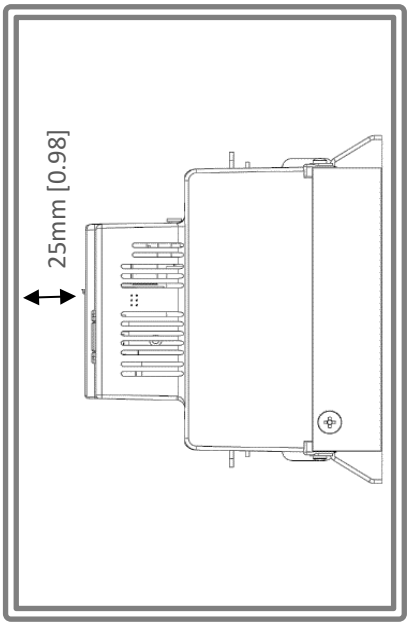

Air Flow

Installation (continued)

Dimensions VMX-AGY-201 to VMX-AGY-205

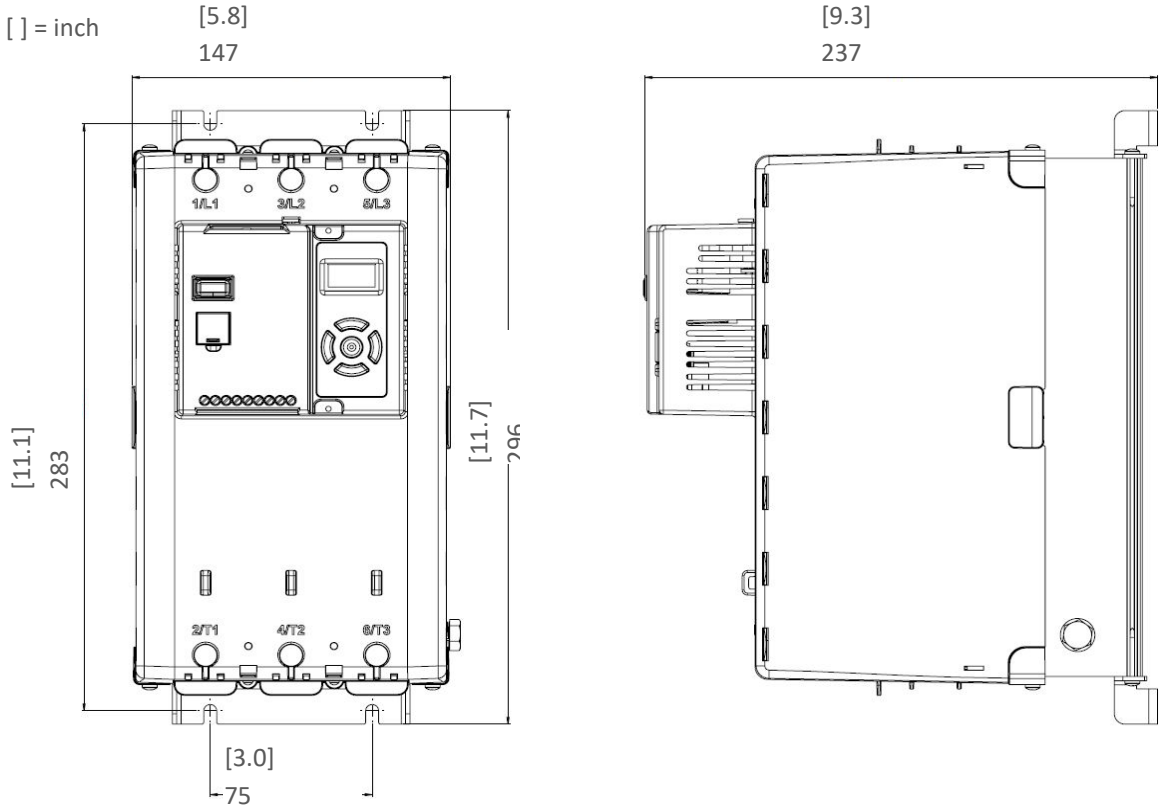

Weight 6 kg [13.22LB] (VMX-AGY-201 to VMX-AGY-207), 6.3 kg [13.89] (VMX-AGY-209)

Fitting

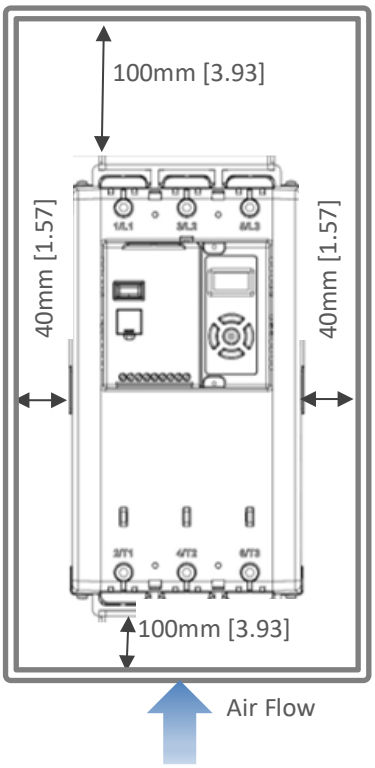

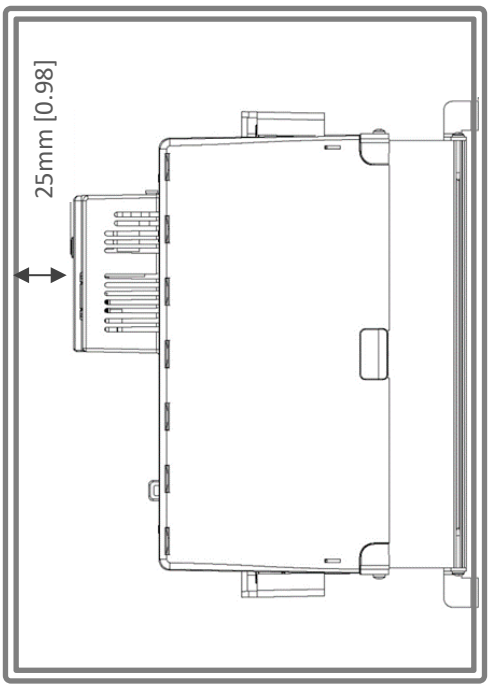

Installation (continued)

Dimensions VMX-AGY-301 to VMX-AGY-305

Weight 15kg [33.10lb)

[ ] = inch

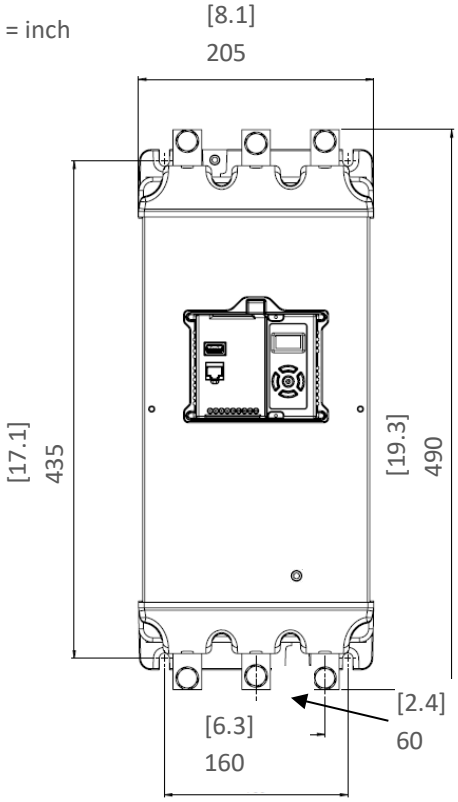

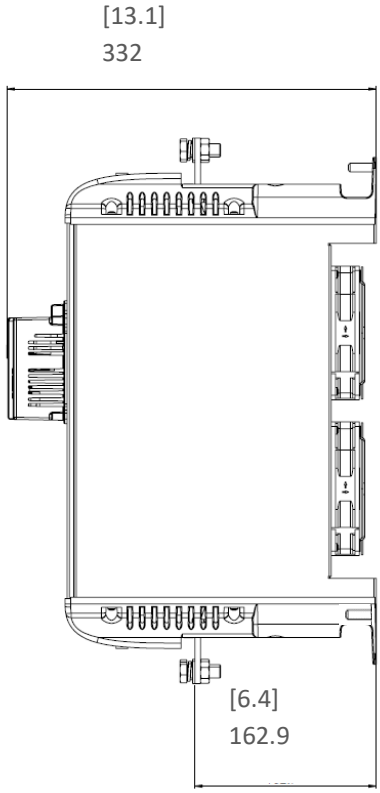

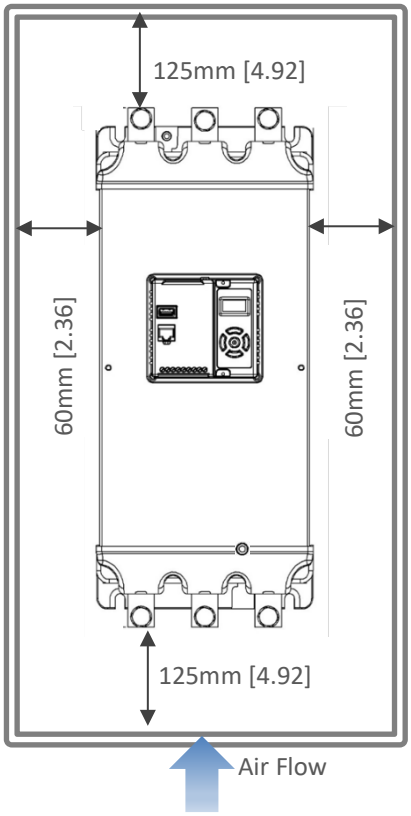

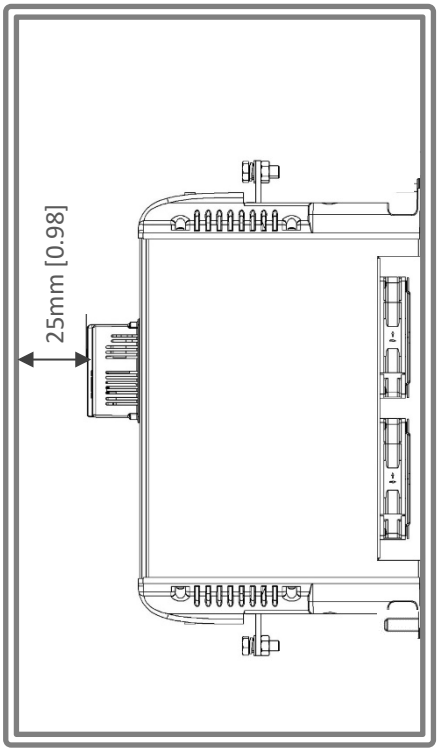

Electrical Installation

Warnings

Isolation

Caution: VMX-agility™ uses semiconductor devices in the main circuit and is not designed to provide isolation. For this reason, isolation means must be installed in the supply circuit in accordance with the appropriate wiring and safety regulations.

Electrical Control Supply Requirements

All electrical connections are made to power input and output terminals, control terminals and an earth stud.

Fuse Protection

The Mains Supply and the Control Supply each require protection. Although all units have electronic overload protection for the Soft Starter, the installer should always fit fuses, for motor protection, between the unit and the Mains Supply, not between the unit and the motor. Semiconductor fuses can be supplied as an option for short-circuit protection of the semiconductors. These fuses must be fitted externally to the VMX-agility™ chassis to comply with certain standards. It is the responsibility of the installer and system designer/specifier to ensure that the required standards or regulations are not affected by so doing.

Safety

VMX-agility™ soft starters contain hazardous voltages when connected to the electrical power supply. Only qualified personnel who are trained and authorized should carry out installation, operation and maintenance of this equipment. Refer to and carefully follow all of the 'Warnings' section at the beginning of this user manual, as well as other warnings and notes throughout the manual.

Electrical Supplies

The unit requires a 3-phase balanced Mains Supply to provide the power for the controlled motor, and a 24Vdc for the internal control circuitry. The unit will not operate unless the control supply voltage is within the specified limits.

Electrical Installation (continued)

Electrical Connections

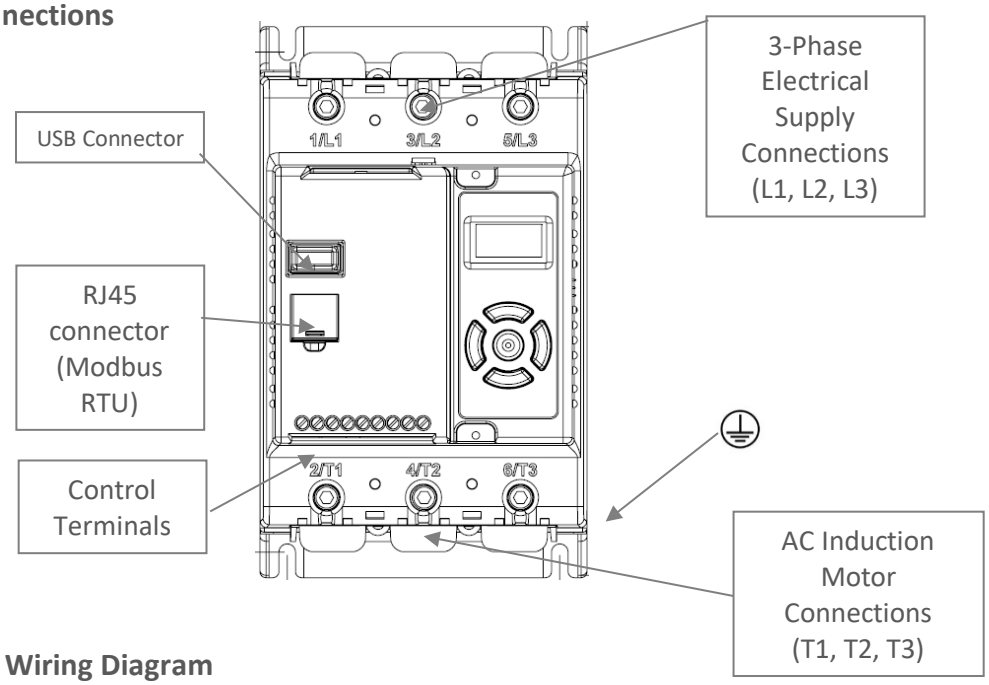

Mains Circuit Wiring Diagram

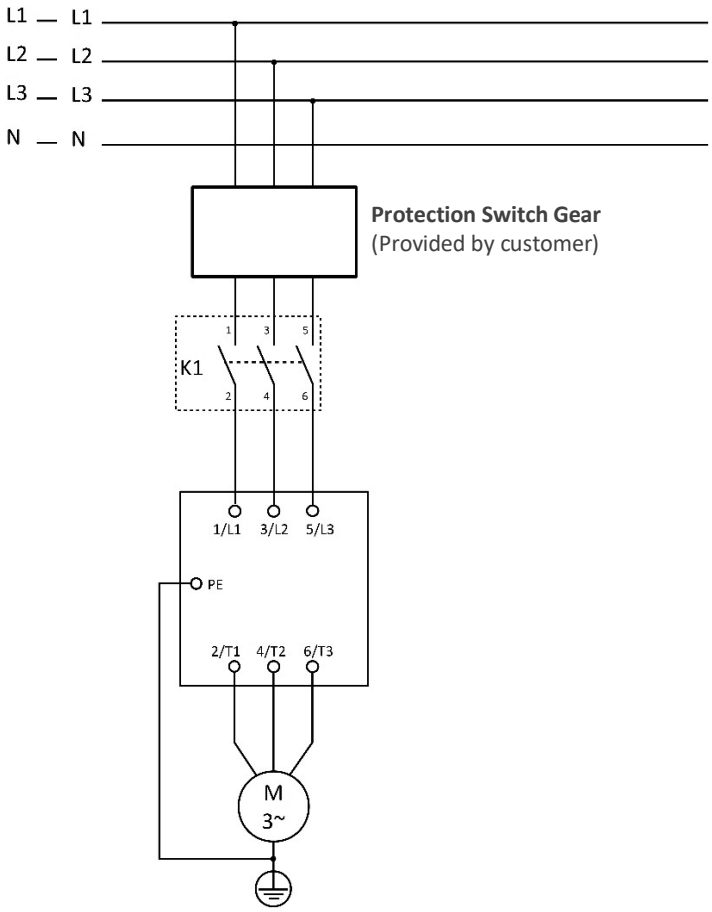

Electrical Installation (continued)

Single Phase Operation

VMX-agility™ soft starts may be operated with a single-phase supply and motor. The base rating of the unit is unchanged.

Electrical Connection

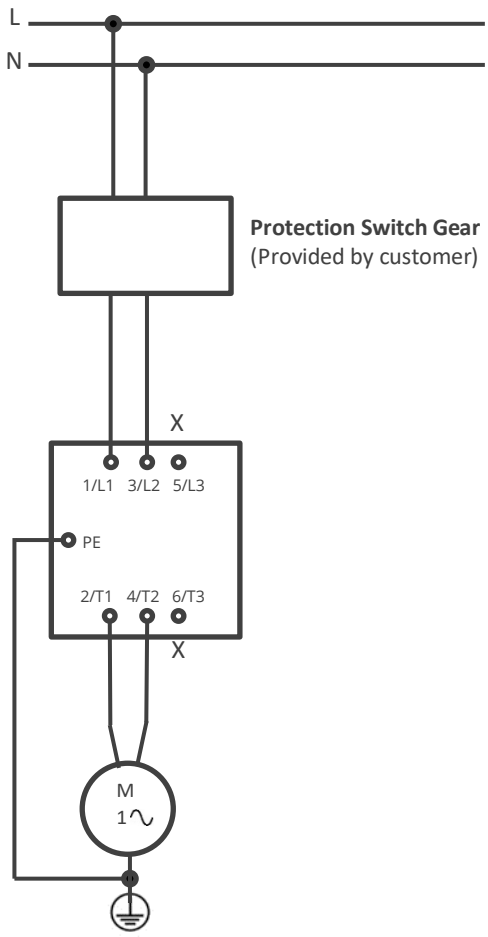

For single phase operation the mode of the soft start must be set correctly in the Advanced menu:

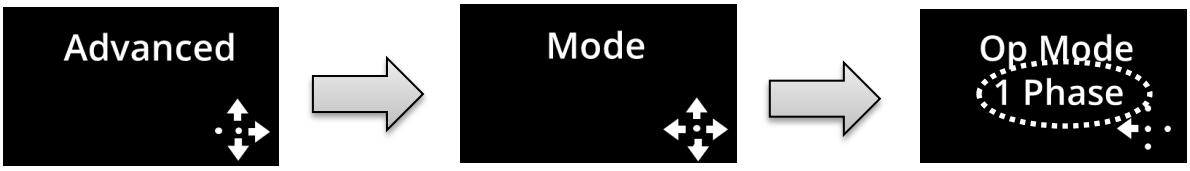

Electrical Installation (continued)

Control Terminal Connections

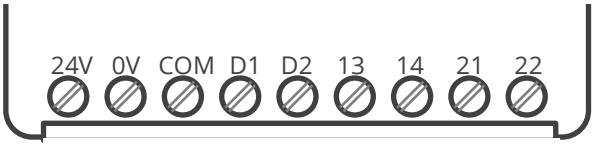

Control Terminal Functions

Terminal	Description	Default	Function Selectable	Note
24Vdc	Control Supply +Us	-	No	#1
0V	Control Supply -Us	-	No	
COM	Digital Inputs Common	-	No	
D1	Digital Input 1	-	No	#2
D2	Digital Input 2	-	Yes	#2
13/14	Main Contactor Control (Run Relay)	-	Yes	#3
21/22	Fault Relay	-	Yes	#3

#1 24Vdc Specification: See General Specification (page 19) for VA rating, residual ripple < 100mV, spikes/switching peaks < 240mV, Turn On/Off response no overshoot of Vout, Overvoltage voltage protection output voltage must be clamped <30Vdc

#2 The voltage applied to the digital inputs D1 and D2 must not exceed 24Vdc

#3 250Vac, 2A, Cosø =0.5

Digital Input 2 (D2) Selectable Functions

Different functions may be assigned to Digital Input 2 in the I/O menu. Available assignments are:

Reset

Hold Start Ramp

Enable

Fire Mode

In Fire Mode all trips are disabled.

Digital Outputs13,14, 21,22 Selectable Functions

The outputs may be mapped to Fault or Top-of-Ramp, Auto Reset Pending or Exceeded.

Electrical Installation (continued)

3-Wire Control Circuit Wiring Diagram

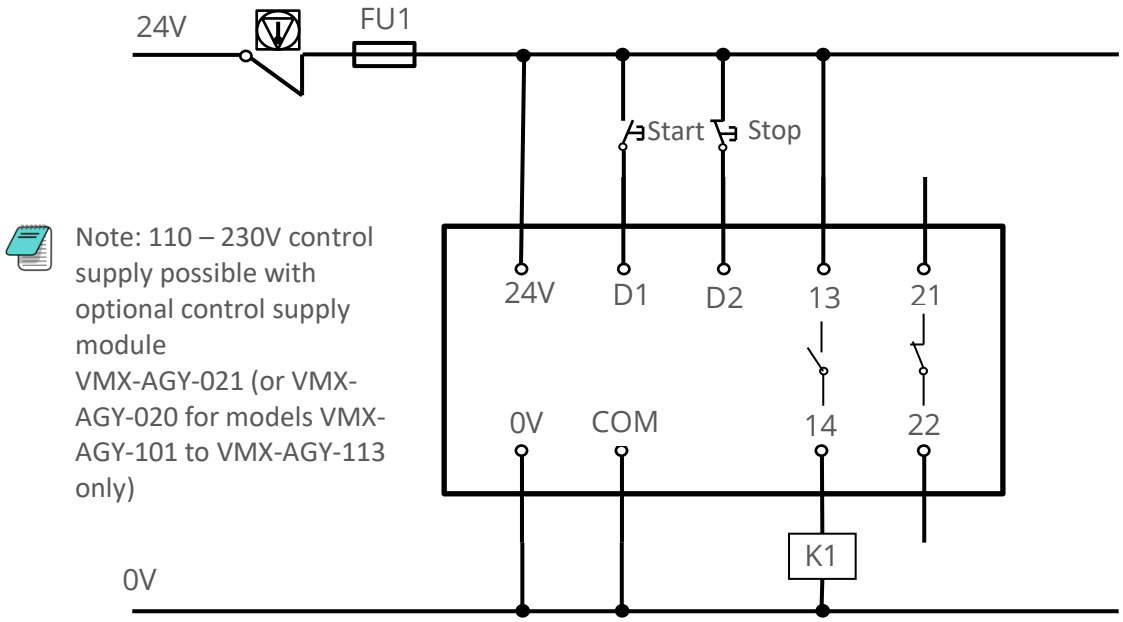

Note: 110 – 230V control supply possible with optional control supply module VMX-AGY-021 (or VMX-AGY-020 for models VMX-AGY-101 to VMX-AGY-113 only)

2-Wire Control Wiring Diagram

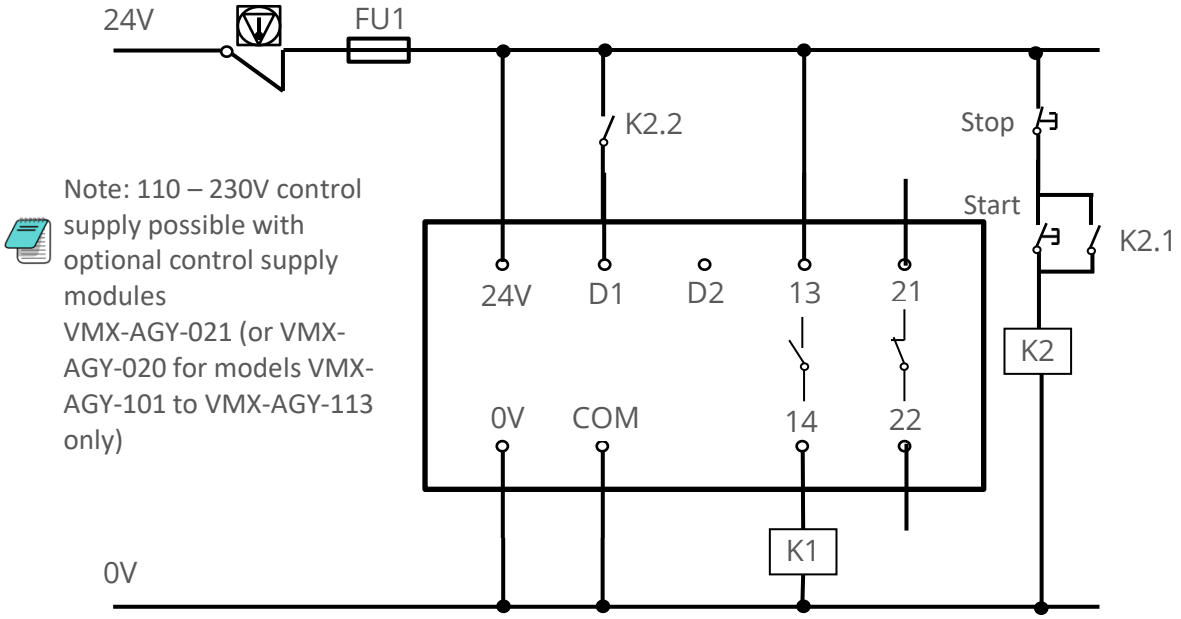

Note: 110 – 230V control supply possible with optional control supply modules VMX-AGY-021 (or VMX-AGY-020 for models VMX-AGY-101 to VMX-AGY-113 only)

Motor Overload

VMX-agility™ provides full motor overload protection, configurable through the user interface. Overload trip settings are determined by the Motor Current setting and the Trip Class setting. Trip class choices are Class 10, Class 20, and Class 30. The VMX-agility™ soft starters are protected using full I^2T motor overload with memory.

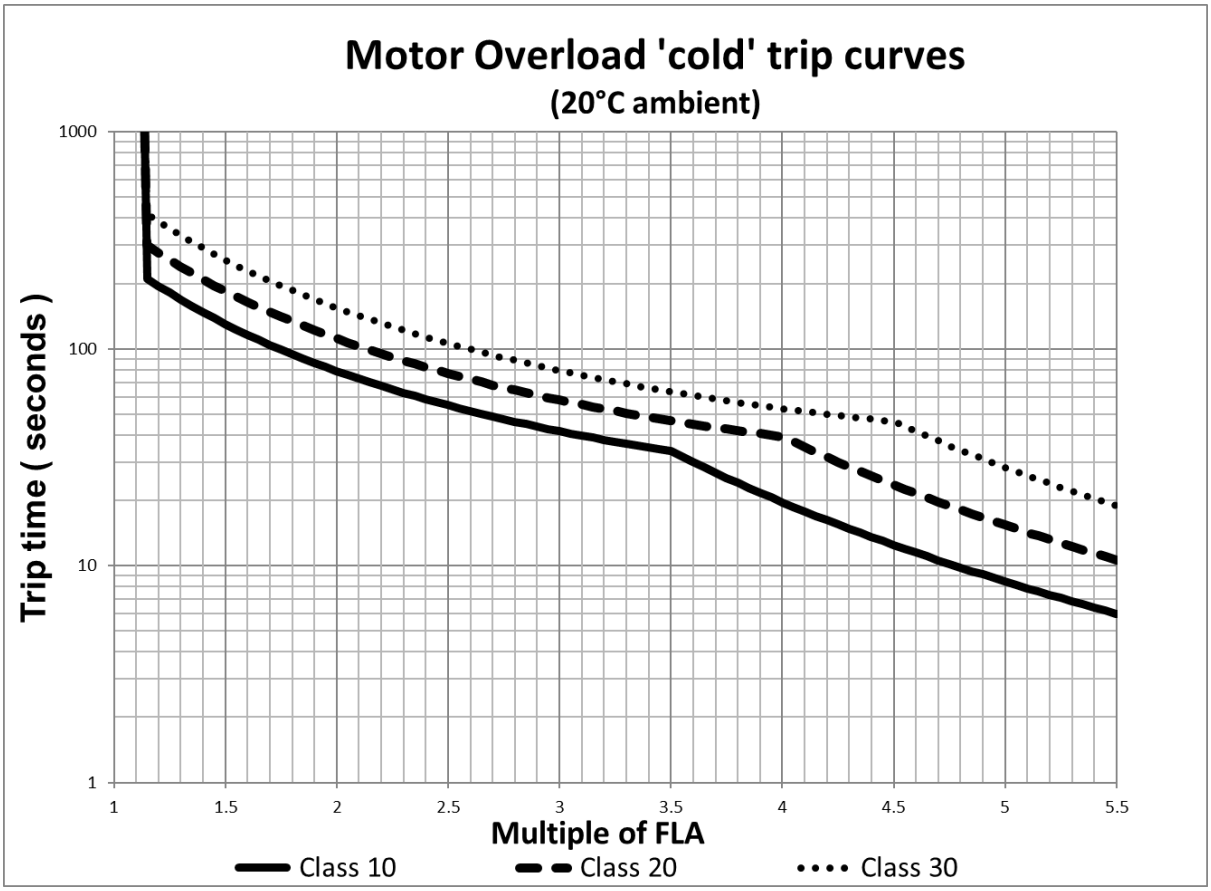

Please note: When the overload has tripped, there is a forced cooling time to allow the overload to recover before the next start.

The 'warm' trip times are 50% of the 'cold' trip time

Configuration and Parameters

Display and Controls

1. Status messages
2. Instantaneous motor current
3. Control scheme: Local, Control terminal, Modbus RTU
4. Keypad guidance wizard: Displays which keys are valid for specific menu items
5. Motor overload level; 0 to 100%
6. Control keypad
7. Status LED (incorporated into centre button) Green/Red

Keypad Guidance Examples

All keys active

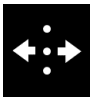

Left & Right keys active

Right, Down & Centre keys active

Note: A flashing centre button indicates that a menu item may be selected or saved.

Configuration and Parameters (continued)

Operation - **Local Motor Start**

Example Navigation Method

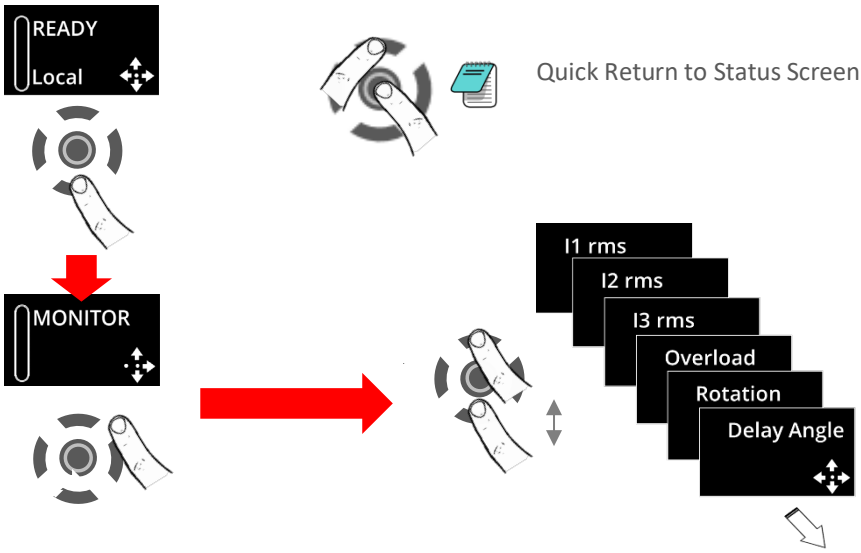

Auto Application Setup

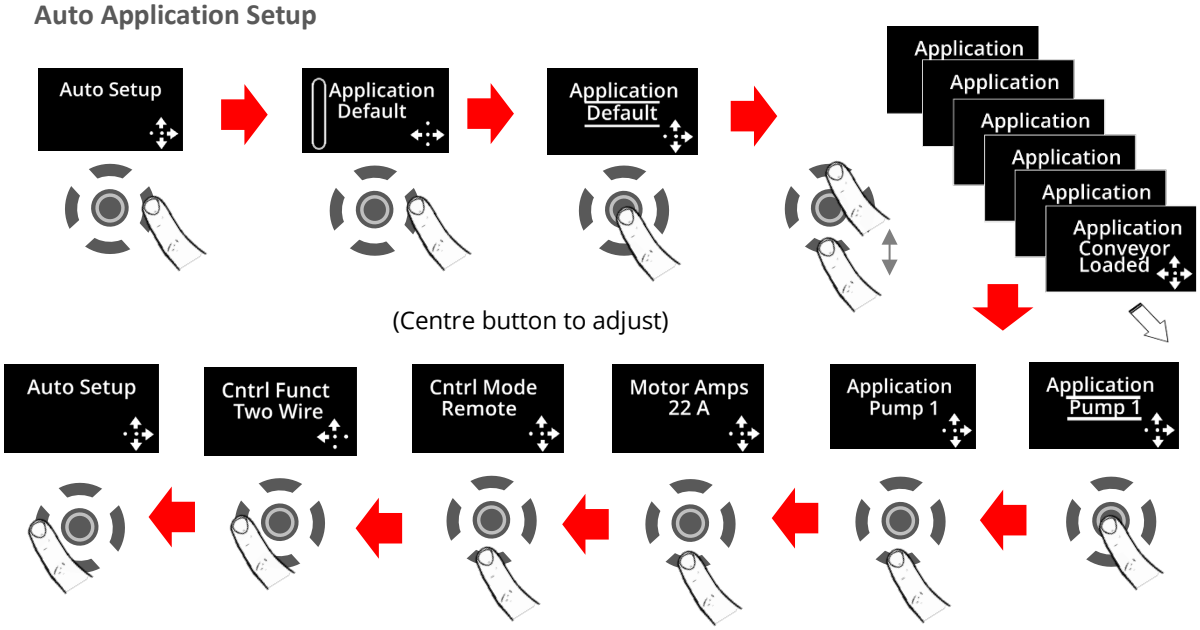

Configuration and Parameters (continued)

Auto Application Setup Parameter Settings

	Initial Volts	Start Time	Stop Time	Trip Class	Current Limit	Current Limit Time
Unit	%	s	s	-	*FLC	s
Default	20%	10	0	10	3.5	30
Heavy	40%	10	0	20	4	40
Agitator	30%	10	0	10	3.5	25
Compressor 1	40%	15	0	20	3.5	25
Compressor 2	35%	7	0	10	3.5	25
Conveyor Loaded	10%	10	7	20	5.5	30
Conveyor Unloaded	10%	10	7	10	3.5	30
Crusher	40%	10	0	30	3.5	60
Fan High Inertia	40%	10	0	30	3.5	60
Fan Low Inertia	30%	15	0	10	3.5	30
Grinder	40%	10	0	20	3.5	40
Mill	40%	10	0	20	3.5	40
Mixer	10%	10	0	20	4	25
Moulding M/C	10%	10	0	10	4.5	25
Press Flywheel	40%	10	0	20	3.5	40
Pump 1	10%	10	60	10	3.5	25
Pump 2	10%	10	60	20	3.5	25
PumpJack	40%	10	0	20	3.5	40
SawBand	10%	10	0	10	3.5	25
SawCircular	40%	10	0	20	3.5	40
Screen Vibrating	40%	10	0	20	4.5	40
Shredder	40%	10	0	30	3.5	60
Wood Chipper	40%	10	0	30	3.5	60

Compressor 1 = Centrifugal, Reciprocating, Rotary Screw
Compressor 2 = Rotary Vane, Scroll
Pump 1 = Submersible: Centrifugal, Rotodynamic
Pump 2 = Positive Displacement: Reciprocating, Rotary

Technical Information/Specification

General Specification			
Product Standard		EN 60947-4-2: 2012	
Rated operational voltages	U_e	200Vac to 600Vac (See Key to part numbers)	
Rated operational current	I_e	See Rating Table	
Rating index		See Rating Table	
Rated frequencies		50 - 60Hz ± 5Hz	
Rated duty		Uninterrupted.	
Form designation		Form 1, Internally Bypassed	
Method of operation		Symmetrically controlled starter	
Method of control		Semi-automatic	
Method of connecting		Thyristors connected between motor windings and supply	
Number of poles		3 main poles, 2 main poles controlled by semiconductor switching element	
Rated insulation voltage	U_i	Main circuit	See Key to part numbers
		Control supply circuit	230Vac r.m.s [1)]
Rated impulse withstand voltage	U_{imp}	Main circuit	6 kV
		Control supply circuit	4 kV [1)]
IP code		Main circuit	IP00 (IP20 with finger guards[6])
		Supply and Control circuit	IP20
Overvoltage Category / Pollution degree		III / 3	
Rated conditional short-circuit current and type of co-ordination with associated short circuit protective device (SCPD)		Type 1 co-ordination See Short Circuit Protection Tables for rated conditional short-circuit current and required current rating and characteristics of the associated SCPD	

Technical Information/Specification

General Specification (continued)				
As Standard	Control Supply (2)	Supply input	0, 24V	Protect with UL248 listed fuse rated Max 4A
		Kind of current, rated frequency	dc	
		Rated voltage U_s	24Vdc	
		Maximum power consumption	12VA (VMX-AGY-101 to VMX-AGY-113) 48VA (VMX-AGY-201 to VMX-AGY-305)	
	Control circuit (2)	Programmable opto-isolated inputs	D1, D2	
		Common input, marking	COM	
		Kind of current, rated frequency	dc	
		Rated voltage U_c	24Vdc	
With VMX-AGY-020/ VMX-AGY-021 module	Control Supply	Supply input	L, N	
		Kind of current, rated frequency	ac, 50 - 60Hz ± 5Hz	
		Rated voltage U_s	110V to 230Vac	
		Rated input current	210mA max (cont.) 1A Peak	
	Control circuit	Programmable opto-isolated inputs	D1, D2	
		Common input	COM	
		Kind of current, rated frequency	ac, 50 - 60Hz ± 5Hz	
		Rated voltage U_c	110V to 230Vac	
Auxiliary Circuit 3)	Form A – Single gap make -contact (normally open)		13, 14	
	Form B – Single gap break-contact (normally closed)		21, 22	
	Utilisation category, voltage rating, current rating		Resistive load, 250Vac, 2A. Cosø =0.5, 250Vac, 2A 4)	

Continued over

Technical Information/Specification

General Specification (continued)		
Electronic overload relay with manual reset and thermal memory	**Trip Class**	10 (factory default), 20 or 30 (selectable)
	Current setting	See Electronic Overload Relay Current Settings
	Rated frequency	50 to 60Hz ± 5Hz
	Time-current characteristics	See Fig.1 for trip curves (Trip time T_p ± 20%)

[1] With optional VMX-AGY-020 or VMX-AGY-021 power supply module.
[2] Must be supplied by class 2, limited voltage current or protected by a 4A UL 248 listed fuse.
[3] Compliant with Annex S of IEC 60947-1:2007 at 24Vdc
[4] Not applicable for UL.
[5] The safety functions were not evaluated by UL. Listing is accomplished according to requirements of Standard UL 508 and CSA14-13, general use applications
[6] For models VMX-AGY-101 to VMX-AGY-209 the main circuit IP20 rating only applies when the finger guards as supplied are fitted.
[7] Transient surge suppression shall be installed on the line side of this equipment and shall be rated 600_V (phase to phase), suitable for overvoltage category III, and shall provide protection for a rated impulse withstand voltage peak of 6 kV.

Electromagnetic Compatibility		
EMC Emission levels	**EN 55011**	Class A [1]
EMC Immunity levels	**IEC 61000-4-2**	8kV/air discharge or 4kV/contact discharge
	IEC 61000-4-3	10 V/m
	IEC 61000-4-4	2kV/5kHz (main and power ports)
		1kV/5kHz (signal ports)
	IEC 61000-4-5	2kV line-to-ground 1kV line-to-line
	IEC 61000-4-6	10V

1 NOTICE: This product has been designed for environment A. Use of this product in environment B may cause unwanted electromagnetic disturbances, in which case the user may be required to take adequate mitigation measures

Fan Option	
VMX-Agility model	**Maximum duty cycle F-S with optional fan fitted**
VMX-AGY-101 to VMX-AGY-203	**90-40 (40 cycles per hour)**
VMX-AGY-205	**90-30 (30 cycles per hour)**
VMX-AGY-207	**90-20 (20 cycles per hour)**
VMX-AGY-209	**90-10 (10 cycles per hour)**

VMX-AGY-301 – 305 have permanently fitted fans

Technical Information/Specification

Environmental Specifications							
Model (VMX-AGY-)	**101**	**103**	**105**	**107**	**109**	**111**	**113**
Frame Size	1						
Heat output (W)	9	12	14	16	20	25	30
Weight kg [lb]	1.97 [4.20]						
Model (VMX-AGY-)	**201**	**203**	**205**	**207**	**209**		
Frame Size	2						
Heat output (W)	37	49	61	74	90		
Weight kg [lb]	VMX-AGY-201-VMX-AGY-207 6.00 [13.23] VMX-AGY-209 6.30 [13.89]						
Model (VMX-AGY-)	**301**	**303**	**305**				
Frame Size	3						
Heat output (W)	111	139	166				
Weight kg [lb]	15.00 [33.10]						
Ambient Operating Temp.	-20°C [-4°F] to 40°C [104°F] ; above 40°C derate linearly by 2% of VMX-agility Ie per °C to a maximum of 60°C (140°F)						
Transportation and Storage Temperature	-20°C to 70°C [-4°F to 158°F] continuous						
Humidity	max 85% non-condensing, not exceeding 50% @ 40°C [104°F]						
Maximum Altitude	1,000m [3281ft]; above 1000m derate by 1% of VMX-agility I_e per 100m (328ft) to a maximum altitude of 2,000m (6562ft)						
Environmental Rating	Main Circuit: IP00 (IP20 with optional finger guards); Control Circuit: IP20; No corrosive gases permitted						

Wire Sizes and Torques						
Terminal		**Models**	**Wire/Busbar Size**		**Torque**	
			Metric	**Imperial**	**Nm**	**lb-in**
Main Terminals **Cu STR 75°C only**	**Terminal**	VMX-AGY-101 to VMX-AGY-113	2.5 - 70mm²	12- 2/0AWG	9	80
		VMX-AGY-201 to VMX-AGY-209	4 - 185mm²	12 – 350MCM	14	124
	M10 bolt	VMX-AGY-301 to VMX-AGY-305	2 x 95mm²	2 x 4/0AWG	28	248
Control Terminals		All models	0.2–1.5mm²	24-16AWG	0.5	4.5
Protective Earth [1] ⏚ Cu only	**M6 screw**	VMX-AGY-101	≥ 4mm²	≥ 12AWG	8	71
		VMX-AGY-103 to VMX-AGY-111	≥ 6mm²	≥ 10AWG		
		VMX-AGY-113 to VMX-AGY-203	≥ 10mm²	≥ 8AWG		
	M8 screw	VMX-AGY-205 to VMX-AGY-209	≥ 16mm²	≥ 6AWG	12	106
	M8 Stud	VMX-AGY-301	≥ 25mm²	≥ 4AWG		
		VMX-AGY-303 to VMX-AGY-305	≥ 35mm²	≥ 3AWG		
[1] Protective Earth wire size based on bonding conductor requirements of UL508 Table 6.4 and UL508A Table 15.1.						

Technical Information/Specification

Short Circuit Protection – VMX-Agility Frame Size 1										
Type designation (VMX-AGY-)			**101-4 101-6**	**103-4 103-6**	**105-4 105-4**	**107-4 107-6**	**109-4 109-6**	**111-4 111-6**	**113-4**	**113-6**
Rated operational current	I_e	A	17	22	29	35	41	55	66	66
Rated conditional short circuit current	I_q	kA	5	5	5	5	5	5	5	10
Class J time-delay fuse #1	Maximum rating Z_1	A	30	40	50	60	70	100	125	125
UL Listed inverse-time delay circuit breaker #1	Maximum rating Z_2	A	60	60	60	60	60	150	150	150
Semiconductor fuse (class aR) #2	Type		Mersen 6,9 URD 30 _ Bussmann 170M30__ Bussmann 170M31__ Bussmann 170M32__ SIBA 20 61___				Mersen 6,9 URD 31 _ Bussmann 170M40__ Bussmann 170M41__ Bussmann 170M42__ SIBA 20 61___			
	Fuse rating	A	160A	160A	200A	200A	250A	250A	250A	250A

Short Circuit Protection – VMX-Agility Frame Size 2 & 3										
Type designation (VMX-AGY-)			**201-4 201-6**	**203-4 203-6**	**205-4 205-4**	**207-4 207-6**	**209-4 209-6**	**301-4 301-6**	**303-4 303-6**	**305-4 305-6**
Rated operational current	I_e	A	80	106	132	160	195	242	302	361
Rated conditional short circuit current	I_q	kA	10	10	10	10	10	18	18	18
Class J time-delay fuse #1	Maximum rating Z_1	A	150	200	250	300	400	450	600	600
UL Listed inverse-time delay circuit breaker #1	Maximum rating Z_2	A	250	300	350	450	500	700	800	800
Semiconductor fuse (class aR) #2	Type		Mersen 6,9 URD 31__ Bussmann 170M40__ Bussmann 170M41__ Bussmann 170M42__ SIBA 20 61___					Mersen 6,9 URD 33__ Bussmann 170M60__ Bussmann 170M61__ Bussmann 170M62__ SIBA 20 63__		
	Fuse rating	A	400A	400A	550A	550A	550A	800A	900A	1000A

1. Suitable For Use On A Circuit Capable Of Delivering Not More Than ___I_q___ rms Symmetrical Amperes, 600Volts Maximum, When Protected by Class J time delay Fuses with a Maximum Rating of ___Z_1___ or by a Circuit Breaker with a Maximum Rating of ___Z_2___

2. Correctly selected semiconductor fuses can provide additional protection against damage to the VMX-agility unit (this is sometimes referred to as type 2 co-ordination). These semiconductor fuses are recommended to provide this increased protection.

Technical Information/Specification

Rating Table – Vertically Mounted

I_e	kW [1]			FLA	Hp [2]					Trip Class 10	Trip Class 20	Trip Class 30
A [3]	230V	400V	500V [4]	A [3]	200V	208V	220-240V	440-480V	550-600V [4]	I_e: AC-53a: 3.5-17: F-S [5]	I_e: AC-53a: 4-19: F-S [5]	I_e: AC-53a: 4-29: F-S [5]
17	4	7.5	7.5	17	3	5	5	10	15	-	-	VMX-AGY-101
17	4	7.5	7.5	17	3	5	5	10	15	-	VMX-AGY-101	VMX-AGY-103
17	4	7.5	7.5	17	3	5	5	10	15	VMX-AGY-101	VMX-AGY-103	VMX-AGY-105
22	5.5	11	11	22	5	5	7.5	15	20	VMX-AGY-103	VMX-AGY-105	VMX-AGY-107
29	7.5	15	15	27	7.5	7.5	7.5	20	25	VMX-AGY-105	VMX-AGY-107	VMX-AGY-109
35	7.5	18.5	22	34	10	10	10	25	30	VMX-AGY-107	VMX-AGY-109	VMX-AGY-111
41	11	22	22	41	10	10	10	30	40	VMX-AGY-109	VMX-AGY-111	VMX-AGY-113
55	15	30	37	52	15	15	15	40	50	VMX-AGY-111	VMX-AGY-113	VMX-AGY-201
66	18.5	37	45	65	20	20	20	50	60	VMX-AGY-113	VMX-AGY-201	VMX-AGY-203
80	22	45	55	77	20	25	25	60	75	VMX-AGY-201	VMX-AGY-203	VMX-AGY-205
106	30	55	75	100	30	30	30	75	100	VMX-AGY-203	VMX-AGY-205	VMX-AGY-207
132	37	75	90	125	40	40	40	100	125	VMX-AGY-205	VMX-AGY-207	VMX-AGY-209
160	45	90	110	156	50	50	60	125	150	VMX-AGY-207	VMX-AGY-209	VMX-AGY-301
195	55	110	132	192	60	60	60	150	200	VMX-AGY-209	VMX-AGY-301	VMX-AGY-303
242	75	132	160	242	75	75	75	200	250	VMX-AGY-301	VMX-AGY-303	VMX-AGY-305
302	90	160	200	302	100	100	100	250	300	VMX-AGY-303	VMX-AGY-305	-
361	110	200	250	361	125	125	150	300	350	VMX-AGY-305	-	-

Rating Table – Horizontally Mounted

I_e	kW [1]			FLA	Hp [2]					Trip Class 10	Trip Class 20	Trip Class 30
A [3]	230V	400V	500V [4]	A [3]	200V	208V	220-240V	440-480V	550-600V [4]	I_e: AC-53a: 3.5-17: F-S [5]	I_e: AC-53a: 4-19: F-S [5]	I_e: AC-53a: 4-29: F-S [5]
17	4	7.5	7.5	17	3	5	5	10	15	-	VMX-AGY-101	VMX-AGY-103
17	4	7.5	7.5	17	3	5	5	10	15	VMX-AGY-101	VMX-AGY-103	VMX-AGY-105
17	4	7.5	7.5	17	3	5	5	10	15	VMX-AGY-103	VMX-AGY-105	VMX-AGY-107
22	5.5	11	11	22	5	5	7.5	15	20	VMX-AGY-105	VMX-AGY-107	VMX-AGY-109
29	7.5	15	15	27	7.5	7.5	7.5	20	25	VMX-AGY-107	VMX-AGY-109	VMX-AGY-111
35	7.5	18.5	22	34	10	10	10	25	30	VMX-AGY-109	VMX-AGY-111	VMX-AGY-113
41	11	22	22	41	10	10	10	30	40	VMX-AGY-111	VMX-AGY-113	
55	15	30	37	52	15	15	15	40	50	VMX-AGY-113		

1) Rated operational powers in kW as per IEC 60072-1 (primary series) corresponding to IEC current rating.

2) Rated operational powers in hp as per UL508 corresponding to FLA current rating.

3) The I_e and FLA rating applies for a maximum surrounding air temperature of 40°C. Above 40°C de-rate linearly by 2% of Ie or FLA per °C to a maximum of 60°C.

4) kW and Hp ratings applicable for VMX-AGY-101-6 to VMX-AGY-305-6 models only.

5) For VMX-AGY-101 to VMX-AGY-209, duty cycle F-S = 90-5, however more cycles per hour are possible with optional fan fitted as indicated in Fan option table. For VMX-AGY-301 to VMX-AGY-305, duty cycle F-S = 90-3 for more cycles consult Start Soft Starters or supplier.

Electric current, Danger to life!
Only skilled or instructed persons may carry out the operations.

Lebensgefahr durch Strom!
Nur Elektrofachkräfte und elektrotechnisch unterwiesene Personen dürfen die im Folgenden beschriebenen Arbeiten ausführen.

Tension électrique dangereuse!
Seules les personnes qualifiées et averties doivent exécuter les travaux ci-après.

¡Corriente eléctrica! ¡Peligro de muerte!
El trabajo a continuación descrito debe ser realizado por personas cualificadas y advertidas.

Tensione elettrica: Pericolo di morte!
Solo persone abilitate e qualificate possono eseguire le operazioni di seguito riportate.

触电危险！
只允许专业人员和受过专业训练的人员进行下列工作。

Электрический ток! Опасно для жизни!
Только специалисты или проинструктированные лица могут выполнять следующие операции.

Levensgevaar door elektrische stroom!
Uitsluitelijk deskundigen in elektriciteit en elektrotechnisch geinstrueerde personen is het toegestaan, de navolgend beschrevene werkzaamheden uit te voeren.

Livsfare på grund af elektrisk strøm!
Kun uddannede el-installatører og personer der e instruerede i elektrotekniske arbejdsopgaver, må udføre de nedenfor anførte arbejder.

Προσοχή, κίνδυνος ηλεκτροπληξίας!
Οι εργασίες που αναφέρονται στη συνέχεια θα πρέπει να εκτελούνται μόνο από ηλεκτρολόγους και ηλεκτροτεχνίτες.

Perigo de vida devido a corrente eléctrica!
Apenas electricistas e pessoas com formação electrotécnica podem executar os trabalhos que a seguir se descrevem.

Livsfara genom elektrisk ström!
Endast utbildade elektriker och personer som undervisats i elektroteknik får utföra de arbeten som beskrivs nedan.

Hengenvaarallinen jännite!
Vain pätevät sähköasentajat ja opastusta saaneet henkilöt saavat suorittaa seuraavat työt.

Nebezpečí úrazu elektrickým proudem!
Níže uvedené práce smějí provádět pouze osoby s elektrotechnickým vzděláním.

Eluohtlik! Elektrilöögioht!
Järgnevalt kirjeldatud töid tohib teostada ainult elektriala spetsialist või elektrotehnilise instrueerimise läbinud personal.

Életveszély az elektromos áram révén!
Csak elektromos szakemberek és elektrotechnikában képzett személyek végezhetik el a következőkben leírt munkákat.

Elektriskā strāva apdraud dzīvību!
Tālāk aprakstītos darbus drīkst veikt tikai elektrospeciālisti un darbam ar elektrotehniskām iekārtām instruētās personas!

Porażenie prądem elektrycznym stanowi zagrożenie dla życia!
Opisane poniżej prace mogą przeprowadzać tylko wykwalifikowani elektrycy oraz osoby odpowiednio poinstruowane w zakresie elektrotechniki.

Livsfara genom elektrisk ström!
Endast utbildade elektriker och personer som undervisats i elektroteknik får utföra de arbeten som beskrivs nedan.

Hengenvaarallinen jännite!
Vain pätevät sähköasentajat ja opastusta saaneet henkilöt saavat suorittaa seuraavat työt.

Nebezpečí úrazu elektrickým proudem!
Níže uvedené práce smějí provádět pouze osoby s elektrotechnickým vzděláním.

Eluohtlik! Elektrilöögioht!
Järgnevalt kirjeldatud töid tohib teostada ainult
elektriala spetsialist või elektrotehnilise
instrueerimise läbinud personal.

Életveszély az elektromos áram révén!
Csak elektromos szakemberek és elektrotechnikában képzett személyek végezhetik el a következőkben leírt munkákat.

Elektriskā strāva apdraud dzīvību!
Tālāk aprakstītos darbus drīkst veikt tikai elektrospeciālisti un darbam ar elektrotehniskām iekārtām instruētās personas!

Porażenie prądem elektrycznym stanowi zagrożenie dla życia!
Opisane poniżej prace mogą przeprowadzać tylko wykwalifikowani elektrycy oraz osoby odpowiednio poinstruowane w zakresie elektrotechniki.

Livsfara genom elektrisk ström!
Endast utbildade elektriker och personer som undervisats i elektroteknik får utföra de arbeten som beskrivs nedan.

Hengenvaarallinen jännite!
Vain pätevät sähköasentajat ja opastusta saaneet henkilöt saavat suorittaa seuraavat työt.

Nebezpečí úrazu elektrickým proudem!
Níže uvedené práce smějí provádět pouze osoby s elektrotechnickým vzděláním.

Eluohtlik! Elektrilöögioht!
Järgnevalt kirjeldatud töid tohib teostada ainult
elektriala spetsialist või elektrotehnilise
instrueerimise läbinud personal.

Életveszély az elektromos áram révén!
Csak elektromos szakemberek és elektrotechnikában képzett személyek végezhetik el a következőkben leírt munkákat.

Elektriskā strāva apdraud dzīvību!
Tālāk aprakstītos darbus drīkst veikt tikai elektrospeciālisti un darbam ar elektrotehniskām iekārtām instruētās personas!

Porażenie prądem elektrycznym stanowi zagrożenie dla życia!
Opisane poniżej prace mogą przeprowadzać tylko wykwalifikowani elektrycy oraz osoby odpowiednio poinstruowane w zakresie elektrotechniki.

Опасност за живота от електрически ток!
Операциите, описани в следващите раздели, могат да се извършват само от специалисти-електротехници и инструктиран електротехнически персонал.

Atenţie! Pericol electric!
Toate lucrările descrise trebuie efectuate numai de personal de specialitate calificat şi de persoane cu cunoştiinţe profunde în electrotehnică.

Življenjska nevarnost zaradi električnega toka!
Spodaj opisana dela smejo izvajati samo elektrostrokovnjaki in elektrotehnično poučene osebe.

Nebezpečenstvo ohrozenia života elektrickým prúdom!
Práce, ktoré sú nižšie opísané, smú vykonávať iba elektroodborníci a osoby s elektrotechnickým vzdelaním.

Опасност за живота от електрически ток!
Операциите, описани в следващите раздели,
могат да се извършват само от
специалисти-електротехници и инструктиран

Atenţie! Pericol electric!
Toate lucrările descrise trebuie efectuate numai de personal de specialitate calificat şi de persoane cu cunoştiinţe profunde în electrotehnică.

Pavojus gyvybei dėl elektros srovės!
Tik elektrikai ir elektrotechnikos specialistai gali atlikti žemiau aprašytus darbus.

California Customers: California Proposition 65 Warning

WARNING: this product and associated accessories may contain chemicals known to the State of California to cause cancer, birth defects, or other reproductive harm.

For more information visit https://p65warnings.ca.gov